Harris Broadcast
Deliver the moment.

VSG-4MTG

Master Timing Generator

The VSG-4MTG is part of the Harris Broadcast's new Sync and Timing platform, the ½RU-wide, 1RU tall and 12 inches deep, 3G/HD/SD master timing generator. The unit is small in size, redundant power supply inputs, low power consumption and light in weight, making it a perfect fit for all broadcast television and post production environments.

The VSG-4MTG provide multiple timing inputs that include GPS with 10 MHz and PPS inputs, LTC, NTP, VITC support and future support for IEEE1588 PTP via software upgrade available in the fall of 2012. The video reference input supports NTSC, PAL, SD, HD and 3G formats of video source sync signals including Black Burst (BB) or Tri Level Sync (TLS). The rock solid internal oscillator provides the needed stability for all timing applications.

The VSG-4MTG provide outputs that include NTP master, PTP master, VITC, BB, TLS and LTC outputs with individual offsets on all outputs. Both models also provide for DARS or Word Clock (WC) output. The new easy to use front panel allows for instantaneous status on any source or output including date, time and lock information. This Master Timing Generator provides for daylight savings time and time zone offsets, auto change over for source failures with primary and secondary source selection. The fail over provides the next best choice of maintaining the uninterruptable status that is required by the most stringent systems.

The VSG-4MTG provides 5 sync outputs as BB or TLS with individual offsets and formats. This provides for multiple format timing from a single reference source.

The unit has dual power supply capabilities using external 110/220 universal AC adapters providing the required DC power input.

Features

- Genlock to standard color black (NTSC - SMPTE 170M and PAL - ITU-R BT. 470-5)
- Genlock to Tri-level sync (SMPTE 240M/274M/296M)
- Support for various time code formats and time code user bit formats, including
- SMPTE/EBU drop frame or non-drop time code format
- GPS support via 10 MHz and RS-232 interface
- NTP support and PTP (future support for IEEE1588 PTP via software upgrade available in the fall of 2012) support via a network connection
- VITC support from black burst inputs
- LTC support
- GPI I/O
- Redundant external power supply
- Auxiliary I/O
- VITC support on black burst
- Two LTC outputs
- Support for digital audio reference signal (DARS) or word clock

Processing Features

- Configurable Daylight Savings Time and Leap Second change
- Auto detection for input sources
- User-definable scheduled call outs to time reference sources, such as GPS receivers
- User-programmable delays for input and output, offsets, time code offsets, output phasing, and input and output jam syncs
- Display of current local time and date

VSG-4MTG

Images/Diagrams

Front Panel

Back Panel

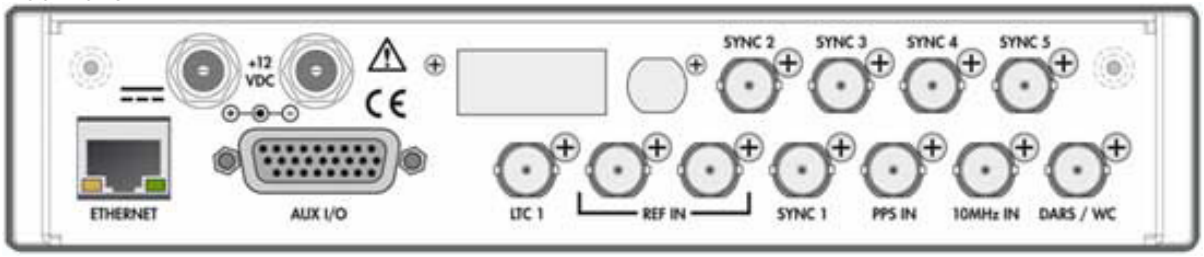

VSG-4-BRK-1 Optional breakout adapter provides GPS RS-232, LTC, PPS and GPIO connections

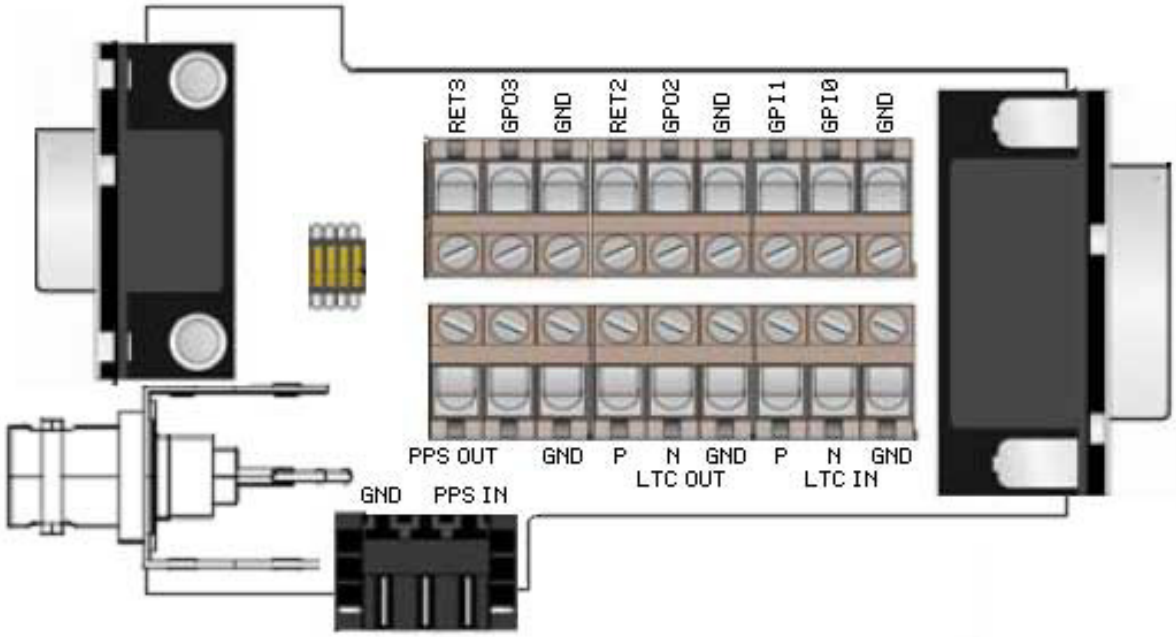

Specifications

Specifications and designs are subject to change without notice

Genlock Input

Input Connector Type ..... BNC female, passive looping
Input Impedance ..... Hi-Z
Blackburst Input Amplitude (External reference) NTSC: Sync and burst 286 mV nominal
PAL: Sync and burst 300 mV nominal
Blackburst Input Amplitude Tolerance ..... ±6 dB
Black Burst Subcarrier Jitter ..... <1 ns (pk-pk) over one horizontal line
Tri-level Sync Amplitude ..... 600 mV pk-pk nominal
Tri-level Sync Amplitude Tolerance ..... ±3 dB
Return Loss ..... <-40 dB

VSG-4MTG

10 MHz Input

Input Connector type	BNC connector
Input Impedance	75 ohms
Level	2 V pk-pk ±3 dB

PPS Input

Input Connector Type	BNC connector
Input Impedance	75 ohms
Level	TTL; Vih=2.0 V min, Vil=0.8V max
Edge Transition	20 ns max
Return Loss	<45 dB to 20 MHz

LTC Input

Input connector Type	3 pin Weidmuller or BNC (Differential balanced or unbalanced)
Nominal Input Amplitude	2 volts pk-pk
Minimum Input Amplitude	0.5 volts pk-pk
Maximum Input Amplitude	4.5 volts pk-pk

Differential balanced

Format	SMPTE/EBU LTC 24/25/30 drop/non-drop auto-sensing
Impedance	Hi-Z (>30 k ohms) or 600 ohms, selectable with switches
Input Sensitivity	500 mV pk-pk

Unbalanced

Format	SMPTE/EBU LTC 24/25/30 drop/non-drop auto-sensing
Impedance	Hi-Z (>30k ohms)
Input sensitivity	500 mV pk-pk

Sync Outputs

Output Connector Type	5 BNC
Blackburst Signal Level	NTSC: sync and burst 286 mV, nominal PAL: sync and burst 300 mV, nominal
Blackburst Subcarrier Jitter	<1 ns (pk-pk) over one horizontal line
SC/H Phase	0° ±10°
Tri-Level Signal Level	600 mV pk-pk
DC Offset	0 V ±0.5 V
Reference to Output Timing	±100 ns

DAR/Word Clock Output (shared DARS/Word Clock)

Audio Formats	AES/EBU
Output Connector Type	BNC
Output Impedance	75 ohms nominal
DARS Output Level	1 V pk-pk
Jitter	≤0.25 UI
Output Sample Rate	48 kHz
Word Clock Output Level	5 V TTL level

LTC Output

Electrical	Differential balanced
Format	SMPTE/EBU LTC 24/25/30 (frame per seconds) drop/non-drop support
Impedance	Low-Z (<25 ohms per side)
Level	3.9 V pk-pk nominal into 1 k ohms (Low-Z output)
Level	2.5 V pk-pk nominal into 1 k ohms (600 ohms output)
Transition Time	40 µs + 4 µs measured at 10% and 90% amplitude
Electrical	Unbalanced
Format	SMPTE/EBU LTC 24/25/30 (frame per seconds) drop/non-drop support
Impedance	Low-Z (<25 ohms per side) or 600 ohms, selectable with switches on optional break-out board
Level	2 V pk-pk nominal into 1 k ohms
Transition Time	40 µs ±4 µs measured at 10% and 90% amplitude

Display	256×64 OLED display for device configuration
Communication Interfaces	1 Ethernet port RJ-45 10/100 Base-T (web browser control, PTP and NTP interfaces) GPIO connector 26 female pin D-sub Nominal Input Amplitude 2 volts pk-pk Minimum Input Amplitude 0.5 volts pk-pk Maximum Input Amplitude 4.5 volts pk-pk

Power

Power connector barrel type with screw lock

Power Input	12 VDC ±1.2 VDC
Power Consumption	<20 W nominal
Non-resetting Fuse	2.5 A, 16 VDC

AC Adapter Included

Mechanical (H X W X D)	1.74 x 8.46 x 13.21 in. (4.42 x 21.49 x 33.32 cm)
Weight	3.05 lbs (1.38 kg)

Environmental

Operating Temperature	32° to 122° F (0° to 50° C)
Storage Temperature	-22° to 149° F (-30° to 65° C)
Humidity (non-condensing)	Operating: 20% to 80%
Non-operating	5% to 90%
Altitude Operating	6562 ft (2000 m)

Ordering Information

VSG-4MTG	Master Timing Generator - provides GPS, NTP, PTP (future support for IEEE1588 PTP via software upgrade available in the fall of 2012), LTC and VITC support with genlock, 5 black outputs with independent timing and format and 2 LTC outputs. ½RU wide, redundant power supply included, optional rackmount available

VSG-4MTG

VSG-4-BRK-1	Breakout panel and 5 ft cable with HD26 pin DSUB Male to Female connectors for the VSG-4 series
DRT-5	Double rackmount tray for VSG-4CSD, VSG-4MTG, use BLK-4 to fill unused space if needed
DRT-ADP-1	Adapter Plate 1 to mount the Compact monitor series 1RU products in the DRT-5. The Compact monitor series products include the CMN-41, CMN-MV, VSG-401, LLM-1770 and RCU-CMS products
BLK-5	Blank panel for left or right side of DRT-4 or DRT-5
PSU-12-1	External Power Supply Unit 12 VDC output with threaded coupling ring, input 90 to 264 VAC
RMT-U1	Rack mount tray universal allows mounting of multiple power supplies, breakout boards and other equipment such as GPS receivers and splitters

Related Products

VSG-4SYS-C	VSG-4CSD System includes 2 VSG-4CSD , 1 VSX-11-3G, 1 DRT-5, 1 RMT-U1, 2 VSG-4-BRK-1
VSG-4SYS-M	VSG-4MTG System includes 2 VSG-4MTG , 1 VSX-11-3G, 1 DRT-5, 1 RMT-U1, 2 VSG-4-BRK-1
VSG-4SYS-V	VSG-401 System includes 2 VSG-401 , 1 VSX-11-3G, 1 RMT-U1 and 1 DRT-4
GPS-3903	GPS receiver for time synchronization
GPS-3904	GPS receiver for time synchronization

© 2013 Harris Broadcast. Proprietary and Confidential.